8

مدرسة التميز النموذجية

(ابتدائي - متوسط - ثانوي)

بنك الأسئلة

اللغة الإنجليزية

الصف الثامن

2025/2024

الفصل الدراسي الأول

خمسةٌ وعشرون عاماً من التميز

ENGLISH

مدرسة التميز النموذجية

قســـم اللغة الإنجليزية

بنـك أسئلة التوجية الفني للغة الإنجليزية

الصــف الثامن

Unit 1 Vocabulary

sprinting (N)		strict (Adj)	
resistance (N)		risk (N)	
flexible (Adj.)		obesity (N)	
extremely (Adv.)		amount (N)	
regimen (N)		gain (V)	
session (N)		lack (V)	
cool down (Phv)		adequate (Adj)	
promise (V)		arrow (N)	

A. Choose the correct answer from a, b, c and d:

1The smoking increases the ……of lung cancer and heart diseases.

a) obesity b) sprinting c) resistance d) risk

2- My friend collected a large …….of money for charity organizations.

a) arrow b) obesity c) amount d) session

3-The wire has to be ……enough to go around corners of the room.

a) adequate b) flexible c) strict d) native

4-Stretching exercises, like Yoga and walking, are good for you to……

a) cool down b) promise c) lack d) gain

B-Fill in the spaces with words from the list:

(strict- gain- adequate- lack- flexible)

5- Some people…… weight because of eating too much junk food.

6- People might have many diseases if they……. sleeping well.

7- Vegetarian people follow a /an…….. diet that includes vegetable, grains and fruits.

8-The school meals should be…….. to meet the children nutritional needs.

II. Grammar

A. Choose the correct answer from a, b, c and d:

1-My parents are angry as my sister sometimes ….her books in the class.

a) leave b) leaves c) was leaving d) left

2-I prefer ……..……my friends during the weekend.

a) meet b) meets c) meeting d) met

3-It is important to …….healthy food to have a good health.

a) eat b) eats c) eating d) ate

B. Do as shown between brackets:

4- My brother travels to London to study. (**Ask a question**)

……..

5- Listen! They (sing) a beautiful song. (**Correct the verb**)

……

6-The farmers are growing trees in the street. (**Negate the sentence**)

……

Unit 2 Vocabulary

lead – led (V)		improve (V)	
theme (N)		master (V)	
provide (V)		frequently (Adv)	
cavern (N)		infection (N)	
voluntary (Adj)		sight (N)	
native (Adj)		determination(N)	
recently (Adv)		overcome (V)	
Achieve (V)		barrier (N)	
inspire (V)		capable (Adj)	
incredibly (Adv)			

A. Choose the correct answer from a, b, c and d:

1- My friend's …… to be the top student made all teachers like her.

a) sight b) cavern c) barrier d) determination

2- Charity and .....organizations are built for helping the needy everywhere.

a) native b) voluntary c) capable d) adequate

3-……., news travel so fast due to modern technology.

a) Unfairly b)Recently c) Frequently d) Extremely

4- Too much fat and sugar can ……to health problems.

a) lead b) inspire c) achieve d) overcome

B-Fill in the spaces with words from the list:

(**infection- improve – achieve- provide- theme**)

5- My sister needs to take a course to…….. her English.

6- The…….. of bacteria and viruses can spread so fast among children.

7- Exhibitions…….. an opportunity for local artists to show their works.

8- The basic…… of these three stories is sport.

II. Grammar

A. Choose the correct answer from a, b, c and d:

1- Sami hasn't finished his report……..

a) yet b) ever c) never d)already

2- Make sure your bags are tagged ……you can find them easily.

a)in order to b) to c) so that d)and

3-Have you …… been to London?

a) never b) yet c) ever d) already

B. Do as shown between brackets:

4- The little boy has played football for two hours. **(Ask a question)**

……..

5- My friends have already met their favourite movie star.

(**Negate the sentence**)

……

6- He plays sports daily. He wants to be fit. **(join using in order to)**

……

Unit 3 Vocabulary

separate (Adj)		hearty (Adj)	
employ (V)		justice (N)	
wage (N)		crowd (N)	
instead of (Adv)		unfairly (Adv)	
trap (N)		dispose of (Ph.V)	
drop out (Ph.V)		float (V)	
jobless (Adj)		package (N)	
inhale (V)		gravity (N)	
stingy (Adj)		casual (Adj)	
furious (Adj)		Specialised (Adj)	

A. Choose the correct answer from a, b, c and d:

1- The law is set to spread ..... among people.

a) trap b) justice c) crowd d) package

2- The closure of the factory left hundreds of men ……

a) jobless b) separate c) casual d) specialised

3- I will stay in Kuwait .....of travelling this summer.

a) unfairly b) instead of c) incredibly d) recently

4- Oil will always ……..on water because it is lighter than water.

a) float b) employ c) inhale d) drop out

B-Fill in the spaces with words from the list:

(wage – trap – unfairly – instead of – crowd)

5- You can make slices of toast with cheese ……butter.

6- Workers who have been ……dismissed may go to the court.

7- She's too smart to fall into the …… of working without pay.

8- This company employ 200 workers at an average …… of 10 KD an hour.

II. Grammar

A. Choose the correct answer from a, b, c and d:

1-I have worked in Kuwait…….. 2000 as a teacher.

a) yet b) just c) since d) for

2-We ……. tennis for 12 hours without having a break.

a) played b) has played c) have played d) play

3-The coffee was …….. hot for me to drink.

a) so b) too c) to d) that

B. Do as shown between brackets:

4- My mother can make a cake. (**Negate the sentence**)

…….

5. This car is very expensive. I can't buy it. **(Use so …..that)**

…….

6. Ali has studied English for three years. (**Form a question**)

…….

Unit 4 Vocabulary

Hire (v)		Plunge in (ph v)	
Raise (v)		Beg (v)	
Community (n)		Exceptionally (adv)	
Demote (v)		Humble (adj)	
Harsh (adj)		Hardship (n)	
Quit (v)		Generation (n)	
Wound (n)		Securely (adv)	
Astonished (adj)		Throughout (preposition)	
Compelled (adj)		Tug on (ph v)	
Heritage (n)			

A. Choose the correct answer from a, b, c and d:

1- We are about to launch a campaign to……money for the orphans in the city.

a) quit b) hire c) raise d) beg

2- Omar may be ……to leave his job due to his health problems.

a) harsh b) casual c) stingy d) compelled

3- Ahmad is very poor and lives in a/an……area of the town.

a)humble b) astonished c) furious d) casual

4- Make sure your seat belt is …… fastened before taking off

a) exceptionally b) securely c) unfairly d) Frequently

B. Fill in the spaces with words from the list:

(generation - hire - hardship- heritage- plunged in)

5- My brother …… the water and started swimming.

6- Pearl diving was an important part of the Kuwaiti ……..

7- We are so busy so we need to …… a babysitter to care for our children.

8- Older …… prefers a darker and more traditional kind of clothing.

II. Grammar

A. Choose the correct answer from a, b, c and d:

1- I tried to catch the bird while my sister .....a story about animals.

a) were reading b) was reading c) is reading d) reads

2- I …….. my lessons when my friend visited me.

a) was studying b) studied c) am studying d) studies

3- When I met my friends , they…….. on the beach.

a) are running b) was running c) were running d) run

b) Do as shown between brackets:

4- The boy ate a delicious cake two hours ago. **(Ask a question)**

……

5-The teacher cancelled the test. **(Change into passive)**

……

6- My brother (fall) down while he was jumping. **(Correct the verb)**

……

Unit 5 Vocabulary

Equator (N)		Counting (N)	
Unique (Adj)		Height (N)	
Glow (V)		Skill (N)	
Reflect (V)		Collection (N)	
Antiquity (N)		Pleasure (N)	
Bargain (N)		House (V)	
Atmosphere (N)		Impressive (Adj)	
Sightseeing (N)		Sculpture(N)	
Destination (N)		Exhibit (N)	
Illusion (N)			

A. Choose the correct answer from a, b, c and d:

1-My uncle has a nice stamp …… in that album.

a) pleasure b) **collection** c) illusion d) exhibit

2-Everybody has .....fingerprints even the identical twins.

a) unique b) astonished c) impressive d) humble

3- When the sun's rays hit the earth, a lot of the heat is ……..back into space.

a) hired b) reflected c) begged d) demoted

4- Khalifa Tower in Dubai is the most ……. building in the UAE.

a) unique b) harsh c) impressive d) humble

b) Fill in the spaces with words from the list:

[**glowing - atmosphere - exhibit - pleasure - housing**]

5- The fireplace was still …… with the remains of last night's fire.

6- Most children get a lot of …… when they play video games.

7- The …… at home is very bad because my grandpa died yesterday.

8- The government is committed to …….. the homeless people.

II. Grammar

A. Choose the correct answer from a, b, c and d:

1- I think Albert Einstein was the ……..scientist in the world.

a) brilliant b) more brilliant c) most brilliant d) as brilliant as

2- This soup is much …… than the previous one.

a) hot b) hotter c) hottest d) the hottest

3- That test was .....than the previous one last week.

a) difficult b) the most difficult c) more difficult d) so difficult

b) Do as shown between brackets:

4- Fahd is tall. Ali is tall. **(Join using 'as … as')**

……

5- Yesterday was ..... (hot) than today. **(Correct)**

……

6- Ahmad was clever. His sister was clever. **(Join using 'as … as')**

……

Unit 6 Vocabulary

fictional (Adj)		donate (V)	
thrilled (Adj)		return (Adj)	
schedule (N)		carpet (N)	
actually (Adv)		oval (Adj)	
conduct (V)		countless (Adj)	
spoil (V)		royal (Adj)	
luxury (Adj)		marble (N)	
Spectacular (Adj)		import (V)	
Chandelier (N)			

A. Choose the correct answer from a, b, c and d:

1- My father bought a very beautiful red .....for our new house.

a) schedule b) skin c) bargain d) carpet

2- I didn't ……want any more dessert, but Julia forced it on me.

a) instead of b) unfairly c) actually d) securely

3- In this documentary, all the characters aren't real; they are ……

a) luxury b) fictional c) thrilled d) oval

4- I haven't seen the film, so don't ……it for me by telling me what happens.

a) conduct b) donate c) import d) spoil

b) Fill in the spaces with words from the list:

[**royal – chandelier - oval - marble - schedule**]

5- The world still remembers the amazing …… wedding of Princess Diana.

6- The entrance of the mosque was paved with black and white ……..tiles.

7- Some houses have strange ……shapes and designs.

8-My father bought a very beautiful crystal …….. for our living room.

II. Grammar

A. Choose the correct answer from a, b, c and d:

1- Dana won't finish her housework on time, …… ?

a) will Dana b) can't she c) Dana will d) will she

2- Those cars are very expensive, ……?

a) are cars b) aren't they c) aren't cars d) are they

3-Bedoor wants to keep a lizard as a pet, ... ?

a) did she b) didn't she c) doesn't she d) does she

B) Do as shown between brackets:

4- I made a (green/ huge/delicious) dish of salad. **(Reorder the adjectives)**

……

5- My father bought a (German – new – small)car. **(Reorder the adjectives)**

……

6- Ahmad hid in the (square – big – brown) box. **(Reorder the adjectives)**

……

Reading comprehension / 1

Read the following passage carefully, then answer the questions below:

Do you have an iPad, iPod, iPhone, a smartwatch or a Mac computer? If you don't, you probably know someone who has one. Steve Jobs made the company -Apple- that created these things that are now such an important part of the lives of millions of people.

Steve Jobs was born on February 24, 1955, in San Francisco, California. When he was a boy, he had a special hobby: he liked to take apart televisions and put **them** back together again. He was a very good student in school and even skipped a grade. After he finished grade four, he went into grade six. In 1972, he graduated from high school at the age of 17. Then he began his studies in Reed College, in Portland, Oregon, but had to **drop out** after six months. Deciding to quit was not at all easy.

Few years later, Steve Jobs found a job as a video game designer at a company called Atari and two years later after that in 1976, when he was only twenty-one years, he created his own company – Apple Computer – with his friend, Steve Wozniak. Steve Jobs later got married in 1991 and had four children. Unfortunately, doctors discovered that he had cancer in 2003 and in 2011 he died at the age of 56.

A) Choose the correct answer from a, b, c and d :

1-What is the best title of this passage?

a- An Incredible Inventor b- Apple Company

c- Video Games Company d- Reed College

2- The underlined word **" drop out "** in the **2nd** paragraph means:

a- take b- travel

c- leave d- break

3-The underlined word " **them** " in the **2nd** paragraph refers to:

a- televisions b- people

c- lives d- millions

4- Steve Jobs skipped a grade at school which means that ……

a- he was a very good student.

b- he moved to college in California.

c- he could quit going to school anytime.

d- he joined a company called Atari

5-According to the text all the following statements are **not true** EXCEPT:

a- Steve Jobs had only three children.

b- Steve Jobs was born in Portland, Oregon.

c- Steve Jobs created Apple Company by himself.

d- Steve Jobs was interested in games designing.

6- What is the main purpose of the writer in this text?

a-To inform us about Steve's life.

b- To talk about video games designing.

c- To advise us to buy Apple Company products.

d- To tell us how important it is to study hard at school.

B) Answer the following questions:

15- What was Steve's special hobby when he was young?

……

16- How many months did Steve Jobs spend studying in college before dropping out?

……..

I. Reading comprehension/2

Read the following passage, then answer the questions below:

Have you ever heard of an animal called a leopard? Maybe you've seen one at the zoo or learned about it at school. These big cats have light-colored fur that is covered in dark spots. They are known for being the strongest of the big cats. Sometimes they are mixed up with cheetahs, but they are not the same!

Leopards can be found in many parts of the world like India, China, and Africa. They can live anywhere from deserts to tropical places. Their dark spots help them blend with their surroundings. This is good because leopards are hunters. Their spots help them hide while they search for prey. The leopard's main food source is meat. It hunts weaker animals in order to have food. It will even hunt for fish and crabs in the water because unlike most cats, leopards love the water.

Leopards are night animals. This means they prefer to sleep during the day and move around at night. They have amazing eyesight and can see much better in the dark than a human. While most leopards have light fur with dark spots, there is a different type called the black leopard. It has dark fur with dark spots. It can be hard to see the spots because they blend into the rest of the fur. Unfortunately, the leopard population has been going down in recent years. This means there are fewer leopards being born. This is especially true in the countries outside of Africa.

A) Choose the correct answer from a, b, c and d :

1- The best title for the passage is:

a. The Strongest Big Cat
c. The Hunter Animal
b. Leopard Population
d. The Dark Spot

2- The word mixed up in the 1st paragraph means:

a. searched
c. found
b. confused
d. covered

3- The underlined word '**they**' in in the 3rd paragraph refers to:

a. countries
c. spots
b. deserts
d. furs

4- Leopards are night animals because they:

a. sleep during the day and move at night
b. have light fur with dark spots
c. hunt for fish and crabs in water
d. hunt weaker animals

5- leopards hunt for fish and crabs because:

a. they blend with the surroundings
b. they have light-coloured fur
c. they love the water
d. they have dark spots

6- The writer's purpose of this text is to:

a. tell us about strong cheetahs
b. show life in tropical places
c. explain how special leopards are.
d. teach us how to hunt leopards

B) Answer the following questions:

7- Where can leopards be found ?

……..

……..

8- How can the spots help leopards?

……

……

Writing /1

"A lot of people are willing to do anything to keep fit." **Plan** and **write** a report of **two** paragraphs (**not less than 10 sentences**) about **"How to Keep it**" explaining **the things they should avoid** and **the things they should do to keep fit.**

* Your writing should include a topic sentence, supporting details and a conclusion.

Plan your topic here (2 Marks)

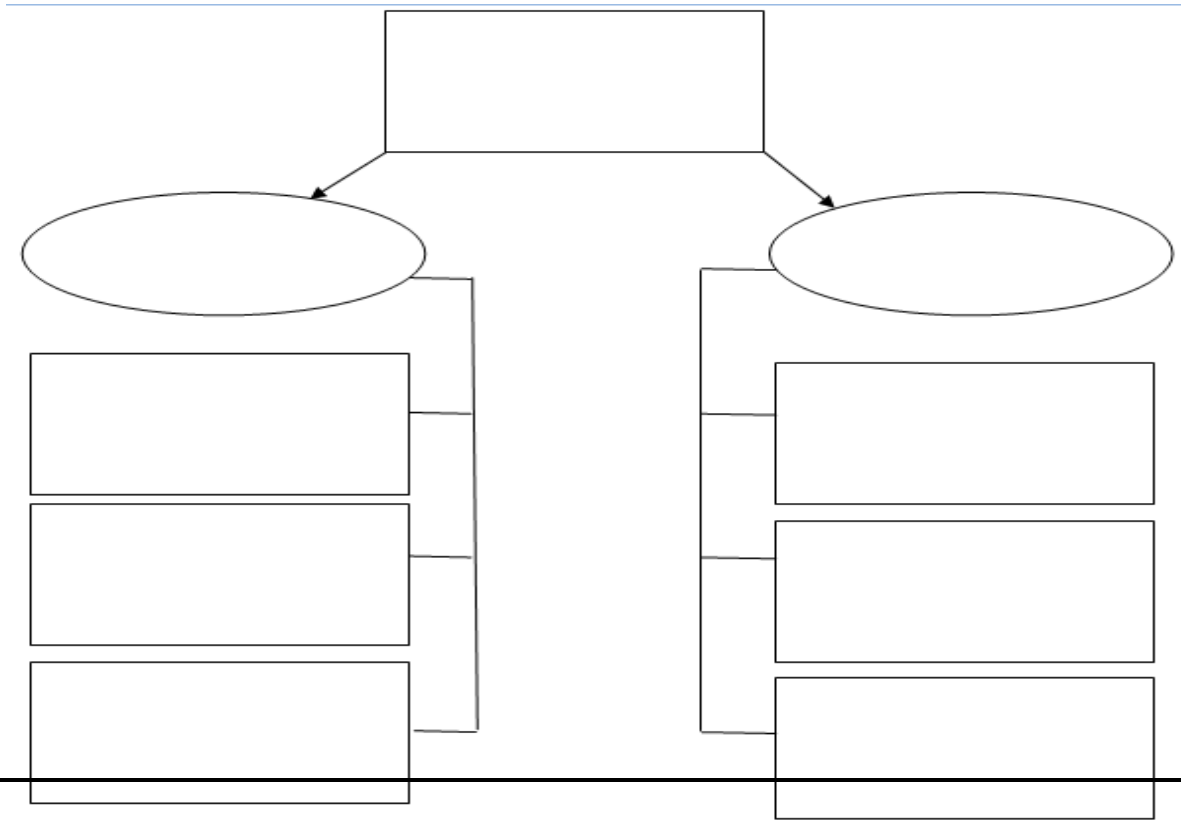

Writing /2

"Travelling into space is a dream of all people of different ages."

'Plan and **write** a topic of **two** paragraphs (**not less than10 sentences**) about **(life in space)** explaining **Why astronauts travel into space** and **how to live in space**.

Your writing should include a topic sentence, supporting details and a conclusion.

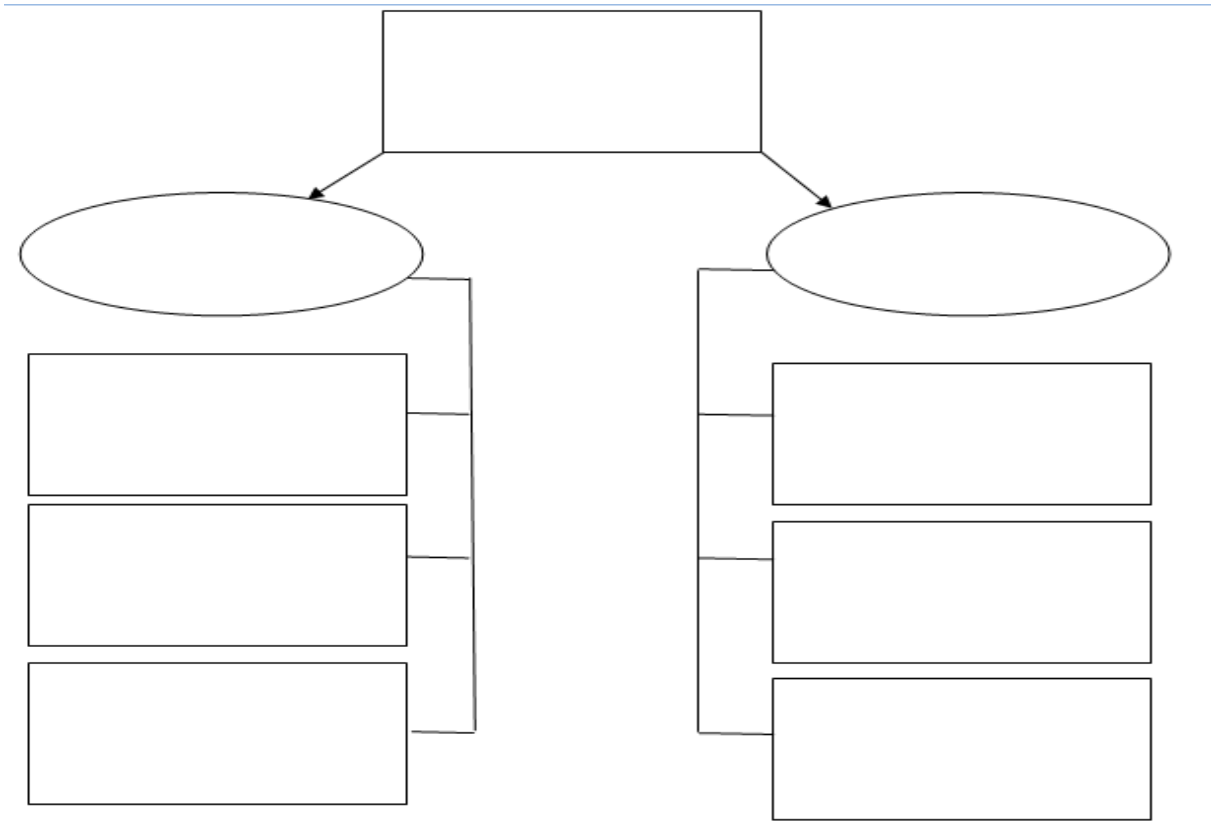

الأسئله في 6 صفحات

وزارة التربية

الإدارة العامة للتعليم الخاص

التوجيه الفني للغة الإنجليزية

امتحان الصف الثامن – نهاية الفترة الدراسية الأولى 2023/2022

المجال الدراسي: اللغة الإنجليزية / الزمن: ساعتان

(الدرجة الكلية : 60 درجة):(مهارة القراءة: المفردات -الاستيعاب المقروء - مهارة الكتابة: القواعد -التعبير)

I. Reading (30 Marks)

A) Vocabulary (14 Marks)

a- From a, b, c and d, choose the correct answer: (4x2=8 Marks)

1- People all over the world dream of living in peace and ……... .

a) session b) barrier c) justice d) schedule

2- Everyone should do his best and work hard to ……... his future goals.

a) gain b) achieve c) demote d) glow

3- Daily stretching activities, such as yoga, make your body more ……... .

a) flexible b) voluntary c) separate d) countless

4- In crowded cities, it is better to use public transport ……... private cars.

a) actually b) instead **of** c) extremely d) exceptionally

b- Fill in the gaps with suitable words from the list: (4x1½ =6 Marks)

(community / obesity / luxury / gravity / adequate)

5- High sugar snacks and fast food cause…….. and heart problems.

6- You need to get …… amount of sleep to stay active and healthy.

7- Astronaut teams face difficulty with drinks and food because of the zero……..

8- AL- Assma Mall has high fashion stores and ……. brands from across the world.

B) READING COMPREHENSION (16 Marks)

Read the following passage, then answer the questions:

Have you ever entered a rainforest? It is a special, dark place where trees grow very tall and millions of animals, insects, and plants live and grow there. A rainforest is found in hot and humid parts of the world. It rains a lot there. Trees grow so closely that **their** branches and leaves slow the rain to reach the ground.

Rainforests are about 6% of Earth's surface. The largest rainforest and the most **enormous** is the Amazon in South America. It covers almost five million square kilometers. The second largest rainforest is in Western Africa. There are also rainforests in America, Asia, Australia, and the Pacific Islands

Rainforests provide us with many things. Half of the world's species of animals and plants live in the rainforests. Eighty percent 80% of the food we eat first grew there. Twenty-five percent 25% of the medicine we take when we are sick is made of plants that grow only in rainforests. The Amazon Rainforest is called the "lungs of our planet" because it produces twenty percent 20% of the world's oxygen. It also gives us one fifth ($^1/_5$) of the world's fresh water.

With all the good things we get from rainforests, we are destroying them. People cut them down to make fields for cows or to grow plants. Destroying rainforests will result in more pollution, less rain, and less oxygen for the world.

a- From a, b, c and d, choose the correct answer: (6x2=12 Marks)

9-What is the **best title** for this passage?

a) Rainforests

b) Pacific Islands

c) Western Africa

d) Species of Animals

10- The underlined word " **enormous** " in the **2nd** paragraph **means very**:

a) clam
b) huge
c) happy
d) noisy

11-The underlined pronoun " **their** " in the **1st** paragraph **refers to**:

a) trees
b) parts
c) insects
d) animals

12- The Amazon Rainforest is called the "lungs of the planet" because it:

a) makes us feel sick.
b) uses much oxygen.
c) provides us with oxygen.
d) gives us all the water we drink.

13- **ONE** of the following statements is **NOT TRUE** about rainforests:

a) Tens of kinds of animals live there.
b) 80% of the food we eat first grew there.
c) 25% of the medicine is made of plants form there.
d) They are found in America, Asia, Australia, and the Pacific Islands.

14- The **purpose** of the writer in this passage is to:

a) inform us about the Earth's surface.
b) tell us some facts about rainforests.
c) entertain us with a story about forest animals.
d) advise us to grow plants instead of rainforests.

b- Answer the following questions: (2x2=4 Marks)

15- Why do people cut rainforests down?

…….

16- What are the bad results of destroying rainforests?

……

11- Writing (30 Marks)

Grammar (14 Marks)

a- From a, b, c and d, choose the correct answer: (4x2=8 Marks)

17- Your little sister completed reading the story, ……....?

a) didn't she b) doesn't she c) hasn't she d) isn't she

18- I met some of my friends while I ……..... in the Avenues Mall.

a) walk b) am walking c) was walking d) have walked

19- Actually this box is ……..... heavy to carry. I need some help here.

a) too b) so c) so that d) in order to

20- Al Hamra Tower is 413 m high; it is ……..... skyscraper in Kuwait.

a) tall b) taller than c) tallest d) the tallest

b-Do as required between brackets:(3×2=6 Marks)

21- My brother broke the old vase by mistake yesterday.

(Change into Passive)

……

22- The boys are wasting their time playing computer games.

(Make negative)

……

23- The teacher (**email**) the exam results for the class since two o'clock.

(**Correct the verb**)

……

B) Writing (16 Marks)

Every Kuwaiti is proud of his country's heritage and willing for a good future

Plan and write a report of two paragraphs of **(NOT less than 10 sentences) about Kuwait in the past and nowadays: writing about people's lifestyle, entertainment, jobs, education and transportation.**

Your writing should include (a topic sentence, supporting details and a conclusion)

Pre-writing Plan (2 Marks)

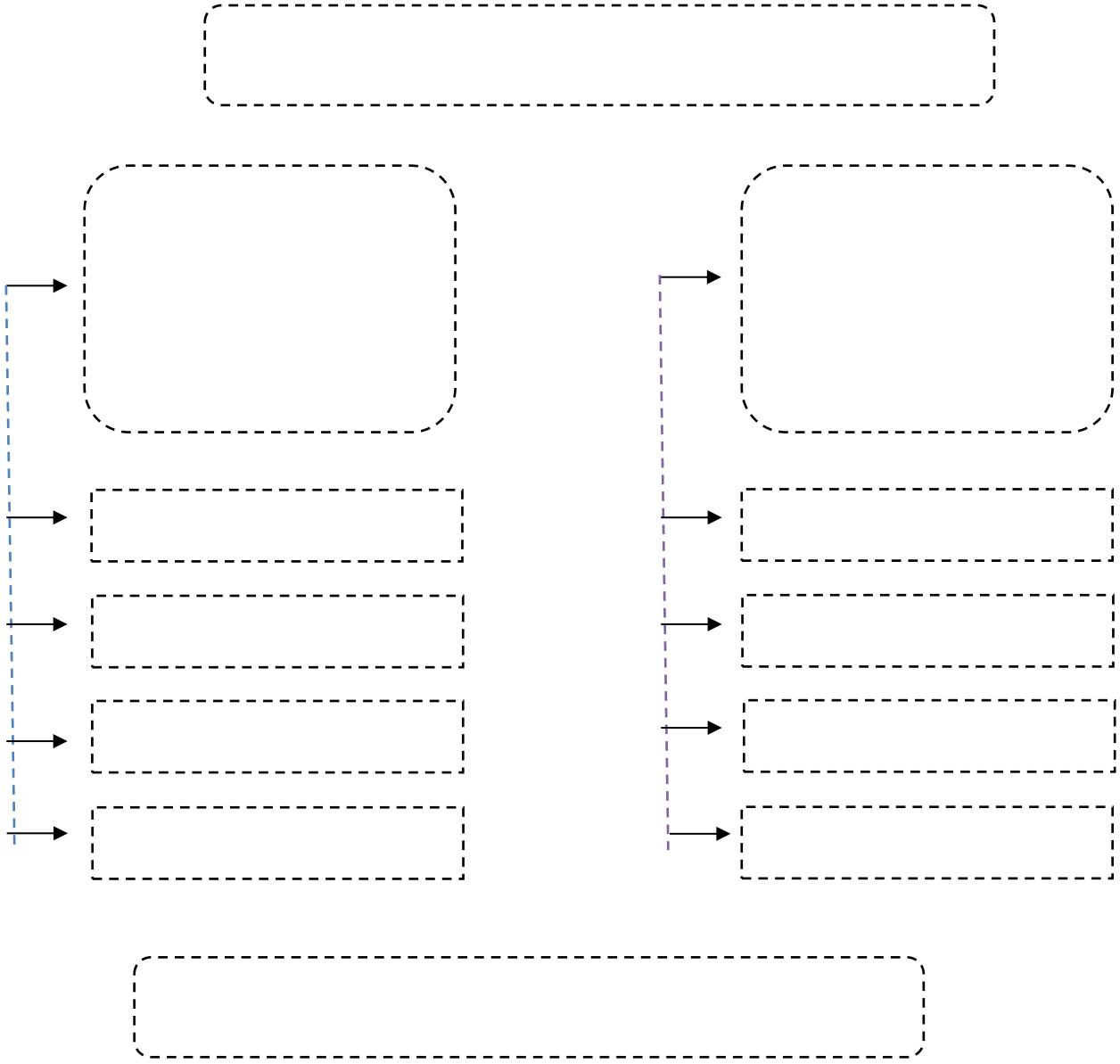

ENGLISH

Model Answer + Mock Exam

Unit 1 Vocabulary

sprinting (N)		strict (Adj)	
resistance (N)		risk (N)	
flexible (Adj.)		obesity (N)	
extremely (Adv.)		amount (N)	
regimen (N)		gain (V)	
session (N)		lack (V)	
cool down (Phv)		adequate (Adj)	
promise (V)		arrow (N)	

A. Choose the correct answer from a, b, c and d:

1The smoking increases the ……of lung cancer and heart diseases.

a) obesity b) sprinting c) resistance d) **risk**

2- My friend collected a large …….of money for charity organizations.

a) arrow b) obesity c) **amount** d) session

3-The wire has to be ……enough to go around corners of the room.

a) adequate b) **flexible** c) strict d) native

4-Stretching exercises, like Yoga and walking, are good for you to……

a) **cool down** b) promise c) lack d) gain

B-Fill in the spaces with words from the list:

(strict- gain- adequate- lack- flexible)

5- Some people **gain** weight because of eating too much junk food.

6- People might have many diseases if they **lack** sleeping well.

7- Vegetarian people follow a /an **strict** diet that includes vegetable, grains and fruits.

8-The school meals should be **adequate** to meet the children nutritional needs.

II. Grammar

A. Choose the correct answer from a, b, c and d:

1-My parents are angry as my sister sometimes ….her books in the class.

a) leave b) **leaves** c) was leaving d) left

2-I prefer ……..……my friends during the weekend.

a) meet b) meets c) **meeting** d) met

3-It is important to …….healthy food to have a good health.

a) **eat** b) eats c) eating d) ate

B. Do as shown between brackets:

4- My brother travels to London to study. (**Ask a question**)

Why does your brother travel to London?

5- Listen! They (sing) a beautiful song. (**Correct the verb**)

Listen! They **are singing** a beautiful song.

6-The farmers are growing trees in the street. (**Negate the sentence**)

The farmers are not growing trees in the street

Unit 2 Vocabulary

lead – led (V)		improve (V)	
theme (N)		master (V)	
provide (V)		frequently (Adv)	
cavern (N)		infection (N)	
voluntary (Adj)		sight (N)	
native (Adj)		determination(N)	
recently (Adv)		overcome (V)	
Achieve (V)		barrier (N)	
inspire (V)		capable (Adj)	
incredibly (Adv)			

A. Choose the correct answer from a, b, c and d:

1- My friend's …… to be the top student made all teachers like her.

a) sight b) cavern c) barrier d) **determination**

2- Charity and .....organizations are built for helping the needy everywhere.

a) native b) **voluntary** c) capable d) adequate

3-……., news travel so fast due to modern technology.

a) Unfairly b)**Recently** c) Frequently d) Extremely

4- Too much fat and sugar can ……to health problems.

a) **lead** b) inspire c) achieve d) overcome

B-Fill in the spaces with words from the list:

(**infection**- **improve – achieve- provide- theme**)

5- My sister needs to take a course to **improve** her English.

6- The **infection** of bacteria and viruses can spread so fast among children.

7- Exhibitions **provide** an opportunity for local artists to show their works.

8- The basic **theme** of these three stories is sport.

II. Grammar

A. Choose the correct answer from a, b, c and d:

1- Sami hasn't finished his report…….

a) **yet** b) ever c) never d)already

2- Make sure your bags are tagged ……you can find them easily.

a)in order to b) to c) **so that** d)and

3-Have you …… been to London?

a) never b) yet c) **ever** d) already

B. Do as shown between brackets:

4- The little boy has played football for two hours. **(Ask a question)**

What has the little boy played for two hours?

5- My friends have already met their favourite movie star.

(**Negate the sentence**)

My friends have not met their favourite movie star yet.

6- He plays sports daily. He wants to be fit. **(join using in order to)**

He plays sports daily in order to be fit.

Unit 3 Vocabulary

separate (Adj)		hearty (Adj)	
employ (V)		justice (N)	
wage (N)		crowd (N)	
instead of (Adv)		unfairly (Adv)	
trap (N)		dispose of (Ph.V)	
drop out (Ph.V)		float (V)	
jobless (Adj)		package (N)	
inhale (V)		gravity (N)	
stingy (Adj)		casual (Adj)	
furious (Adj)		Specialised (Adj)	

A. Choose the correct answer from a, b, c and d:

1- The law is set to spread ..... among people.

a) trap b) **justice** c) crowd d) package

2- The closure of the factory left hundreds of men ……

a) **jobless** b) separate c) casual d) specialised

3- I will stay in Kuwait .....of travelling this summer.

a) unfairly b) **instead of** c) incredibly d) recently

4- Oil will always ……..on water because it is lighter than water.

a) **float** b) employ c) inhale d) drop out

B-Fill in the spaces with words from the list:

(wage – trap – unfairly – instead of – crowd)

5- You can make slices of toast with cheese **instead of** butter.

6- Workers who have been **unfairly** dismissed may go to the court.

7- She's too smart to fall into the **trap** of working without pay.

8- This company employ 200 workers at an average **wage** of 10 KD an hour.

II. Grammar

A. Choose the correct answer from a, b, c and d:

1-I have worked in Kuwait…….. 2000 as a teacher.

a) yet b) just c) **since** d) for

2-We ……. tennis for 12 hours without having a break.

a) played b) has played c) **have played** d) play

3-The coffee was …….. hot for me to drink.

a) so b) **too** c) to d) that

B. Do as shown between brackets:

4- My mother can make a cake. (**Negate the sentence**)

My mother can't make a cake.

5. This car is very expensive. I can't buy it. **(Use so …..that)**

This car is so expensive that I can't buy it.

6. Ali has studied English for three years. (**Form a question**)

How long has Ali studied English?

Unit 4 Vocabulary

Hire (v)		Plunge in (ph v)	
Raise (v)		Beg (v)	
Community (n)		Exceptionally (adv)	
Demote (v)		Humble (adj)	
Harsh (adj)		Hardship (n)	
Quit (v)		Generation (n)	
Wound (n)		Securely (adv)	
Astonished (adj)		Throughout (preposition)	
Compelled (adj)		Tug on (ph v)	
Heritage (n)			

A. Choose the correct answer from a, b, c and d:

1- We are about to launch a campaign to……money for the orphans in the city.

a) quit b) hire c) **raise** d) beg

2- Omar may be ……to leave his job due to his health problems.

a) harsh b) casual c) stingy d) **compelled**

3- Ahmad is very poor and lives in a/an……area of the town.

a)**humble** b) astonished c) furious d) casual

4- Make sure your seat belt is …… fastened before taking off

a) exceptionally b) **securely** c) unfairly d) Frequently

B. Fill in the spaces with words from the list:

(generation - hire - hardship- heritage- plunged in)

5- My brother **plunged in** the water and started swimming.

6- Pearl diving was an important part of the Kuwaiti **heritage**.

7- We are so busy so we need to **hire** a babysitter to care for our children.

8- Older **generation** prefers a darker and more traditional kind of clothing.

II. Grammar

A. Choose the correct answer from a, b, c and d:

1- I tried to catch the bird while my sister .....a story about animals.

a) were reading b) **was reading** c) is reading d) reads

2- I …….. my lessons when my friend visited me.

a) **was studying** b) studied c) am studying d) studies

3- When I met my friends , they…….. on the beach.

a) are running b) was running c) **were running** d) run

b) Do as shown between brackets:

4- The boy ate a delicious cake two hours ago. **(Ask a question)**

What did the boy eat two hours ago?

5-The teacher cancelled the test. **(Change into passive)**

The test was cancelled.

6- My brother (fall) down while he was jumping. **(Correct the verb)**

My brother **fell** down while he was jumping.

Unit 5 Vocabulary

Equator (N)		Counting (N)	
Unique (Adj)		Height (N)	
Glow (V)		Skill (N)	
Reflect (V)		Collection (N)	
Antiquity (N)		Pleasure (N)	
Bargain (N)		House (V)	
Atmosphere (N)		Impressive (Adj)	
Sightseeing (N)		Sculpture(N)	
Destination (N)		Exhibit (N)	
Illusion (N)			

A. Choose the correct answer from a, b, c and d:

1-My uncle has a nice stamp …… in that album.

a) pleasure b) **collection** c) illusion d) exhibit

2-Everybody has .....fingerprints even the identical twins.

a) **unique** b) astonished c) impressive d) humble

3- When the sun's rays hit the earth, a lot of the heat is ……..back into space.

a) hired b) **reflected** c) begged d) demoted

4- Khalifa Tower in Dubai is the most ……. building in the UAE.

a) unique b) harsh c) **impressive** d) humble

b) Fill in the spaces with words from the list:

[**glowing - atmosphere - exhibit - pleasure - housing**]

5- The fireplace was still **glowing** with the remains of last night's fire.

6- Most children get a lot of **pleasure** when they play video games.

7- The **atmosphere** at home is very bad because my grandpa died yesterday.

8- The government is committed to **housing** the homeless people.

II. Grammar

A. Choose the correct answer from a, b, c and d:

1- I think Albert Einstein was the ……..scientist in the world.

a) brilliant b) more brilliant c) **most brilliant** d) as brilliant as

2- This soup is much …… than the previous one.

a) hot b) **hotter** c) hottest d) the hottest

3- That test was .....than the previous one last week.

a) difficult b) the most difficult c) **more difficult** d) so difficult

b) Do as shown between brackets:

4- Fahd is tall. Ali is tall. **(Join using 'as … as')**

Fahd is as tall as Ali.

5- Yesterday was ..... (hot) than today. **(Correct)**

Yesterday was **hotter** than today.

6- Ahmad was clever. His sister was clever. **(Join using 'as … as')**

Ahmad was as clever as his sister

Unit 6 Vocabulary

fictional (Adj)		donate (V)	
thrilled (Adj)		return (Adj)	
schedule (N)		carpet (N)	
actually (Adv)		oval (Adj)	
conduct (V)		countless (Adj)	
spoil (V)		royal (Adj)	
luxury (Adj)		marble (N)	
Spectacular (Adj)		import (V)	
Chandelier (N)			

A. Choose the correct answer from a, b, c and d:

1- My father bought a very beautiful red .....for our new house.

a) schedule b) skin c) bargain d) **carpet**

2- I didn't ……want any more dessert, but Julia forced it on me.

a) instead of b) unfairly c) **actually** d) securely

3- In this documentary, all the characters aren't real; they are ……

a) luxury b) **fictional** c) thrilled d) oval

4- I haven't seen the film, so don't ……it for me by telling me what happens.

a) conduct b) donate c) import d) **spoil**

b) Fill in the spaces with words from the list:

[**royal – chandelier - oval - marble - schedule**]

5- The world still remembers the amazing **royal** wedding of Princess Diana.

6- The entrance of the mosque was paved with black and white **marble** tiles.

7- Some houses have strange **oval** shapes and designs.

8-My father bought a very beautiful crystal **chandelier** for our living room.

II. Grammar

A. Choose the correct answer from a, b, c and d:

1- Dana won't finish her housework on time, …… ?

a) will Dana b) can't she c) Dana will d) **will she**

2- Those cars are very expensive, ……?

a) are cars b) **aren't they** c) aren't cars d) are they

3-Bedoor wants to keep a lizard as a pet, ... ?

a) did she b) didn't she c) **doesn't she** d) does she

B) Do as shown between brackets:

4- I made a (green/ huge/delicious) dish of salad. **(Reorder the adjectives)**

I made a delicious huge green dish of salad.

5- My father bought a (German – new – small)car. **(Reorder the adjectives)**

My father bought a small new German car.

6- Ahmad hid in the (square – big – brown) box. **(Reorder the adjectives)**

Ahmad hid in the big square brown box.

Reading comprehension / 1

Read the following passage carefully, then answer the questions below:

Do you have an iPad, iPod, iPhone, a smartwatch or a Mac computer? If you don't, you probably know someone who has one. Steve Jobs made the company -Apple- that created these things that are now such an important part of the lives of millions of people.

Steve Jobs was born on February 24, 1955, in San Francisco, California. When he was a boy, he had a special hobby: he liked to take apart televisions and put **them** back together again. He was a very good student in school and even skipped a grade. After he finished grade four, he went into grade six. In 1972, he graduated from high school at the age of 17. Then he began his studies in Reed College, in Portland, Oregon, but had to **drop out** after six months. Deciding to quit was not at all easy.

Few years later, Steve Jobs found a job as a video game designer at a company called Atari and two years later after that in 1976, when he was only twenty-one years, he created his own company – Apple Computer – with his friend, Steve Wozniak. Steve Jobs later got married in 1991 and had four children. Unfortunately, doctors discovered that he had cancer in 2003 and in 2011 he died at the age of 56.

A) Choose the correct answer from a, b, c and d :

1-What is the best title of this passage?

a- **An Incredible Inventor** b- Apple Company

c- Video Games Company d- Reed College

2- The underlined word **" drop out "** in the **2nd** paragraph means:

a- take b- travel

c- **leave** d- break

3-The underlined word " **them** " in the **2nd** paragraph refers to:

a- **televisions** b- people

c- lives d- millions

4- Steve Jobs skipped a grade at school which means that ……

a- **he was a very good student.**

b- he moved to college in California.

c- he could quit going to school anytime.

d- he joined a company called Atari

5-According to the text all the following statements are **not true** EXCEPT:

a- Steve Jobs had only three children.

b- Steve Jobs was born in Portland, Oregon.

c- Steve Jobs created Apple Company by himself.

d- **Steve Jobs was interested in games designing.**

6- What is the main purpose of the writer in this text?

a-**To inform us about Steve's life.**

b- To talk about video games designing.

c- To advise us to buy Apple Company products.

d- To tell us how important it is to study hard at school.

B) Answer the following questions:

15- What was Steve's special hobby when he was young?

He liked to take apart televisions and put them back together.

16- How many months did Steve Jobs spend studying in college before dropping out?

He spent 6 months.

I. Reading comprehension/2

Read the following passage, then answer the questions below:

Have you ever heard of an animal called a leopard? Maybe you've seen one at the zoo or learned about it at school. These big cats have light-colored fur that is covered in dark spots. They are known for being the strongest of the big cats. Sometimes they are mixed up with cheetahs, but they are not the same!

Leopards can be found in many parts of the world like India, China, and Africa. They can live anywhere from deserts to tropical places. Their dark spots help them blend with their surroundings. This is good because leopards are hunters. Their spots help them hide while they search for prey. The leopard's main food source is meat. It hunts weaker animals in order to have food. It will even hunt for fish and crabs in the water because unlike most cats, leopards love the water.

Leopards are night animals. This means they prefer to sleep during the day and move around at night. They have amazing eyesight and can see much better in the dark than a human. While most leopards have light fur with dark spots, there is a different type called the black leopard. It has dark fur with dark spots. It can be hard to see the spots because they blend into the rest of the fur. Unfortunately, the leopard population has been going down in recent years. This means there are fewer leopards being born. This is especially true in the countries outside of Africa.

A) Choose the correct answer from a, b, c and d :

1- The best title for the passage is:

a. **The Strongest Big Cat**
c. The Hunter Animal
b. Leopard Population
d. The Dark Spot

2- The word mixed up in the 1st paragraph means:

a. searched
c. found
b. **confused**
d. covered

3- The underlined word '**they**' in in the 3rd paragraph refers to:

a. countries
c. **spots**
b. deserts
d. furs

4- Leopards are night animals because they:

a. **sleep during the day and move at night**
b. have light fur with dark spots
c. hunt for fish and crabs in water
d. hunt weaker animals

5- leopards hunt for fish and crabs because:

a. they blend with the surroundings
b. they have light-coloured fur
c. **they love the water**
d. they have dark spots

6- The writer's purpose of this text is to:

a. tell us about strong cheetahs
b. show life in tropical places
c. **explain how special leopards are.**
d. teach us how to hunt leopards

B) Answer the following questions:

7- Where can leopards be found ?

Leopards can be found in many parts of the world like India, China, and Africa./ They can live anywhere from deserts to tropical places.

8- How can the spots help leopards?

Their spots help them hide while they search for prey

Their dark spots help them blend with their surroundings.

Writing /1

"A lot of people are willing to do anything to keep fit." **Plan** and **write** a report of **two** paragraphs (**not less than 10 sentences**) about **"How to Keep it**" explaining **the things they should avoid** and **the things they should do to keep fit.**

* Your writing should include a topic sentence, supporting details and a conclusion.

Plan your topic here (2 Marks)

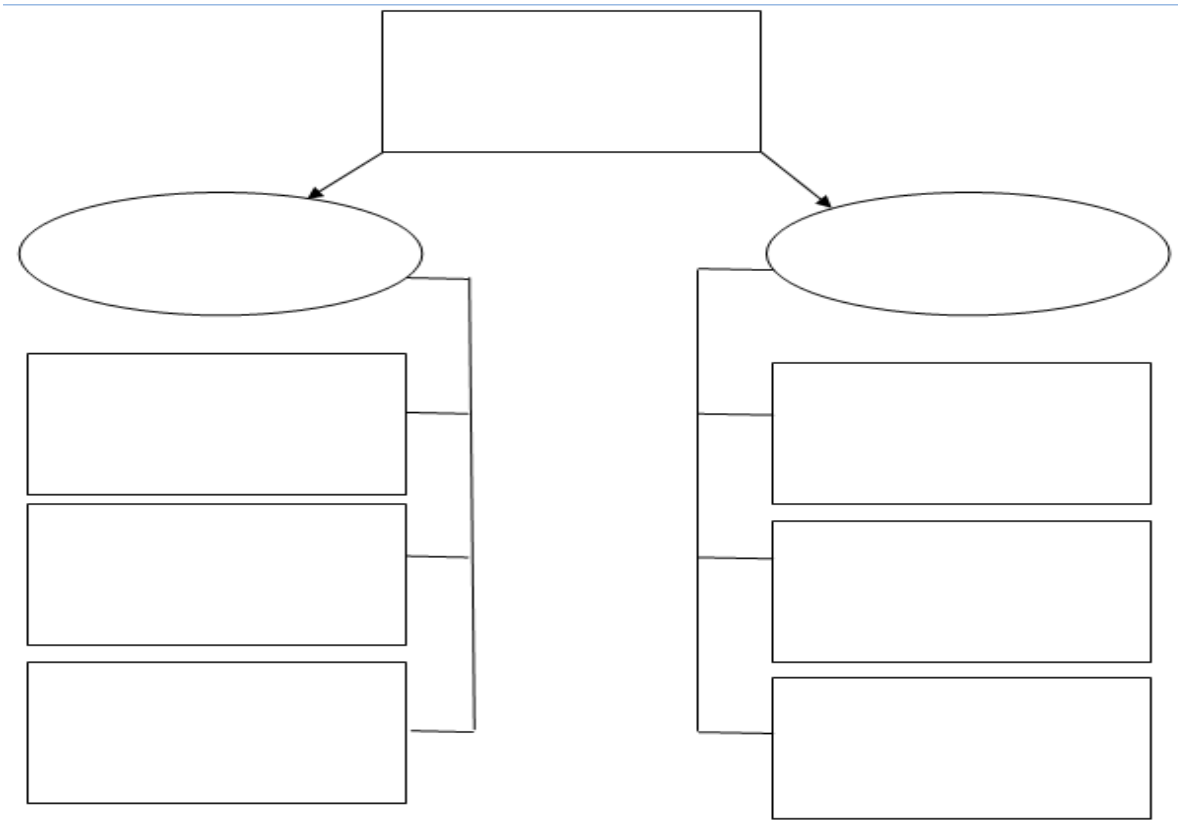

Writing /2

"Travelling into space is a dream of all people of different ages."

'Plan and **write** a topic of **two** paragraphs (**not less than10 sentences**) about **(life in space)** explaining **Why astronauts travel into space** and **how to live in space**.

Your writing should include a topic sentence, supporting details and a conclusion.

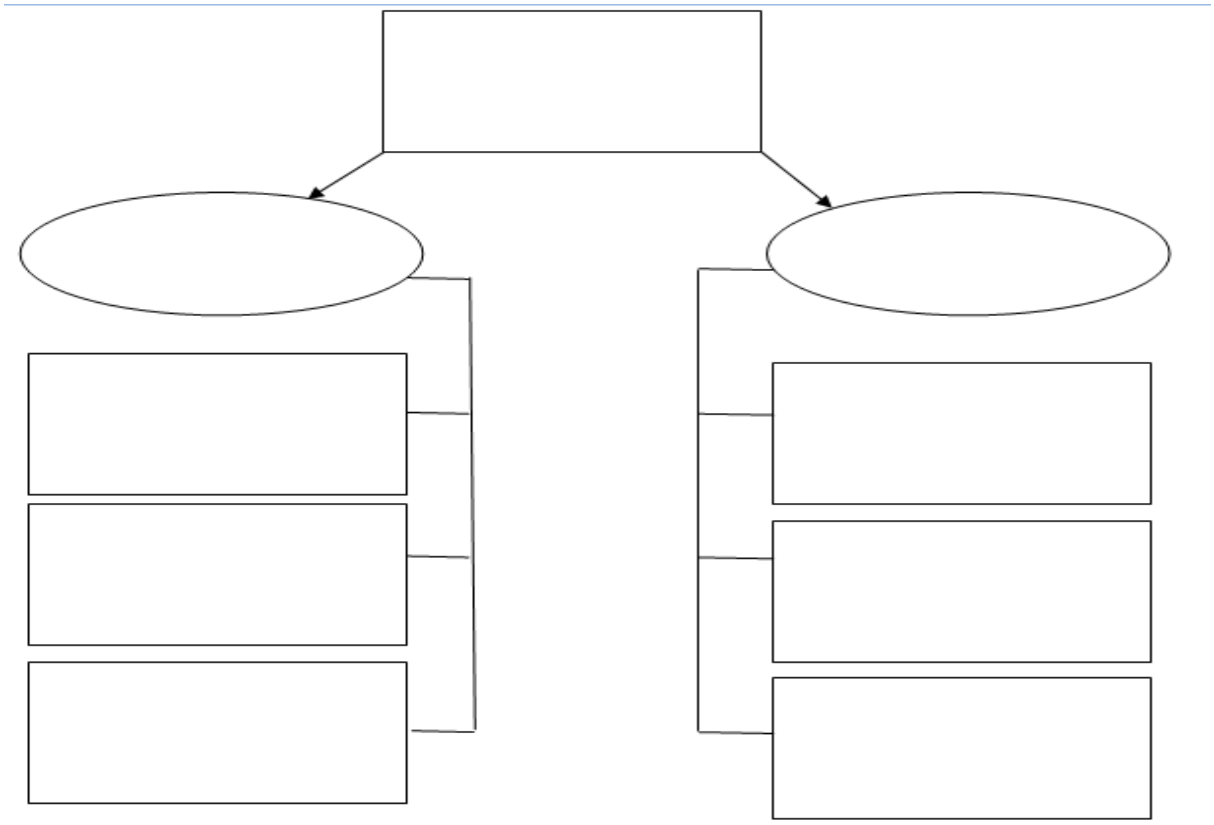

في 6 نموذج الإجابة

وزارة التربية

الإدارة العامة للتعليم الخاص

التوجيه الفني للغة الإنجليزية

امتحان الصف الثامن – نهاية الفترة الدراسية الأولى 2023/2022

المجال الدراسي: اللغة الإنجليزية / الزمن: ساعتان

(الدرجة الكلية : 60 درجة):(مهارة القراءة: المفردات -الاستيعاب المقروء - مهارة الكتابة: القواعد -التعبير)

I. Reading (30 Marks)

A) Vocabulary (14 Marks)

a- From a, b, c and d, choose the correct answer: (4x2=8 Marks)

1- People all over the world dream of living in peace and ……... .

a) session b) barrier c) **justice** d) schedule

2- Everyone should do his best and work hard to ……... his future goals.

a) gain b) **achieve** c) demote d) glow

3- Daily stretching activities, such as yoga, make your body more ……... .

a) **flexible** b) voluntary c) separate d) countless

4- In crowded cities, it is better to use public transport ……... private cars.

a) actually b) **instead of** c) extremely d) exceptionally

b- Fill in the gaps with suitable words from the list: (4x1½ =6 Marks)

(community / obesity / luxury / gravity / adequate)

5- High sugar snacks and fast food cause **obesity** and heart problems.

6- You need to get **adequate** amount of sleep to stay active and healthy.

7- Astronaut teams face difficulty with drinks and food because of the zero **gravity.**

8- AL- Assma Mall has high fashion stores and **luxury** brands from across the world.

B) READING COMPREHENSION (16 Marks)

Read the following passage, then answer the questions:

Have you ever entered a rainforest? It is a special, dark place where trees grow very tall and millions of animals, insects, and plants live and grow there. A rainforest is found in hot and humid parts of the world. It rains a lot there. Trees grow so closely that **their** branches and leaves slow the rain to reach the ground.

Rainforests are about 6% of Earth's surface. The largest rainforest and the most **enormous** is the Amazon in South America. It covers almost five million square kilometers. The second largest rainforest is in Western Africa. There are also rainforests in America, Asia, Australia, and the Pacific Islands

Rainforests provide us with many things. Half of the world's species of animals and plants live in the rainforests. Eighty percent 80% of the food we eat first grew there. Twenty-five percent 25% of the medicine we take when we are sick is made of plants that grow only in rainforests. The Amazon Rainforest is called the "lungs of our planet" because it produces twenty percent 20% of the world's oxygen. It also gives us one fifth ($^1/_5$) of the world's fresh water.

With all the good things we get from rainforests, we are destroying them. People cut them down to make fields for cows or to grow plants. Destroying rainforests will result in more pollution, less rain, and less oxygen for the world.

a- From a, b, c and d, choose the correct answer: (6x2=12 Marks)

9-What is the **best title** for this passage?

a) **Rainforests**

b) Pacific Islands

c) Western Africa

d) Species of Animals

10- The underlined word " **enormous** " in the **2nd** paragraph **means very**:

a) clam
b) **huge**
c) happy
d) noisy

11-The underlined pronoun " **their** " in the **1st** paragraph **refers to**:

a) **trees**
b) parts
c) insects
d) animals

12- The Amazon Rainforest is called the "lungs of the planet" because it:

a) makes us feel sick.
b) uses much oxygen.
c) **provides us with oxygen.**
d) gives us all the water we drink.

13- **ONE** of the following statements is **NOT TRUE** about rainforests:

a) **Tens of kinds of animals live there.**
b) 80% of the food we eat first grew there.
c) 25% of the medicine is made of plants form there.
d) They are found in America, Asia, Australia, and the Pacific Islands.

14- The **purpose** of the writer in this passage is to:

a) inform us about the Earth's surface.
b) **tell us some facts about rainforests.**
c) entertain us with a story about forest animals.
d) advise us to grow plants instead of rainforests.

b- Answer the following questions: (2x2=4 Marks)

15- Why do people cut rainforests down?

People cut them down to make fields for cows./ Or to grow plants.

16- What are the bad results of destroying rainforests?

It will result in more pollution / It will result in less rain. / It will result in less oxygen for the world.

11- Writing (30 Marks)

Grammar (14 Marks)

a- From a, b, c and d, choose the correct answer: (4x2=8 Marks)

17- Your little sister completed reading the story, ……....?

a) **didn't she** b) doesn't she c) hasn't she d) isn't she

18- I met some of my friends while I ……..... in the Avenues Mall.

a) walk b) am walking c) **was walking** d) have walked

19- Actually this box is ……..... heavy to carry. I need some help here.

a) **too** b) so c) so that d) in order to

20- Al Hamra Tower is 413 m high; it is ……..... skyscraper in Kuwait.

a) tall b) taller than c) tallest d) **the tallest**

b-Do as required between brackets:(3×2=6 Marks)

21- My brother broke the old vase by mistake yesterday.

(Change into Passive)

The old vase was broken by mistake yesterday. (by my brother)

22- The boys are wasting their time playing computer games.

(Make negative)

The boys are not wasting their time playing computer games

23- The teacher (**email**) the exam results for the class since two o'clock.

(**Correct the verb**)

…… has emailed ……..……...

B) Writing (16 Marks)

Every Kuwaiti is proud of his country's heritage and willing for a good future

Plan and write a report of two paragraphs of **(NOT less than 10 sentences) about Kuwait in the past and nowadays: writing about people's lifestyle, entertainment, jobs, education and transportation.**

Your writing should include (a topic sentence, supporting details and a conclusion)
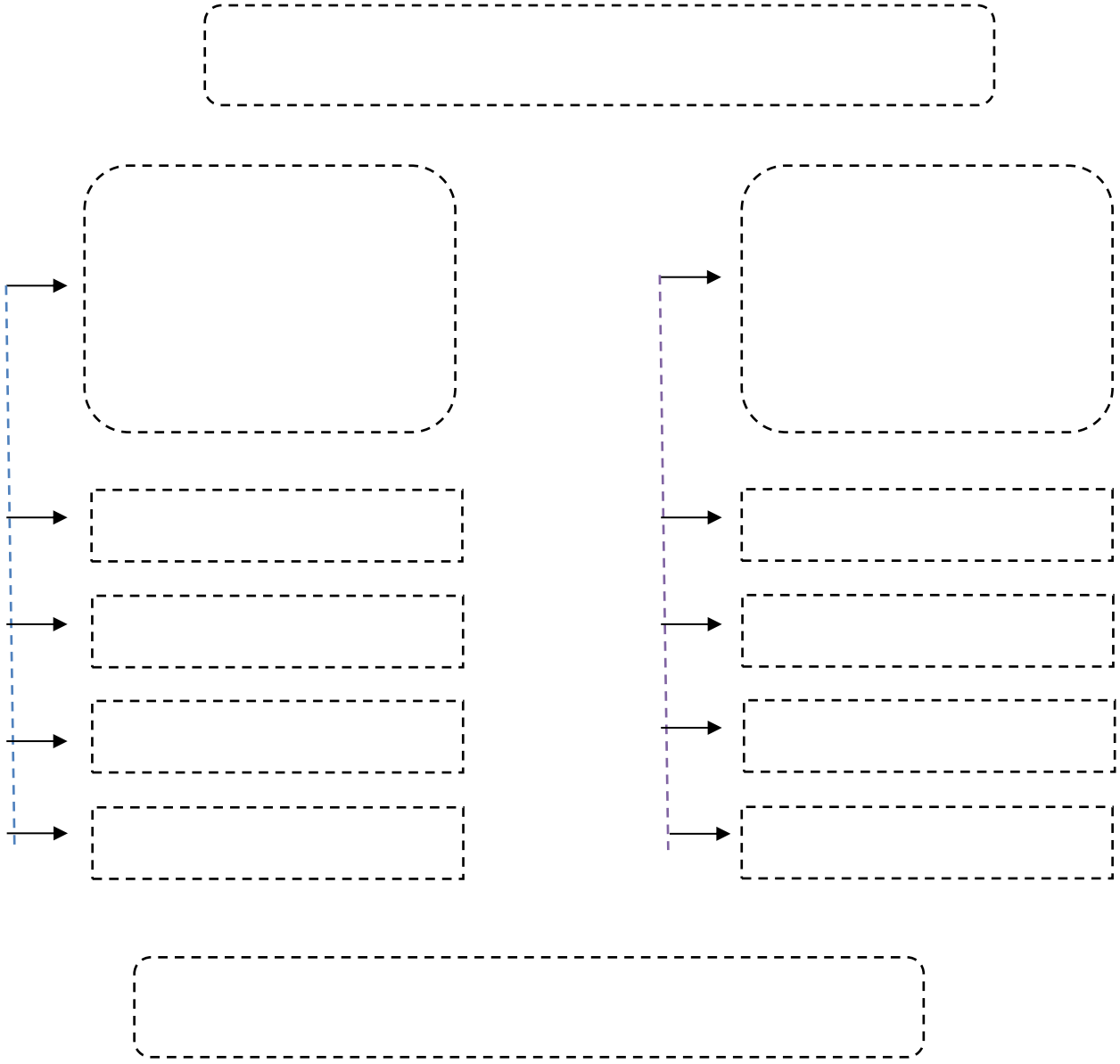
Pre-writing Plan (2 Marks)